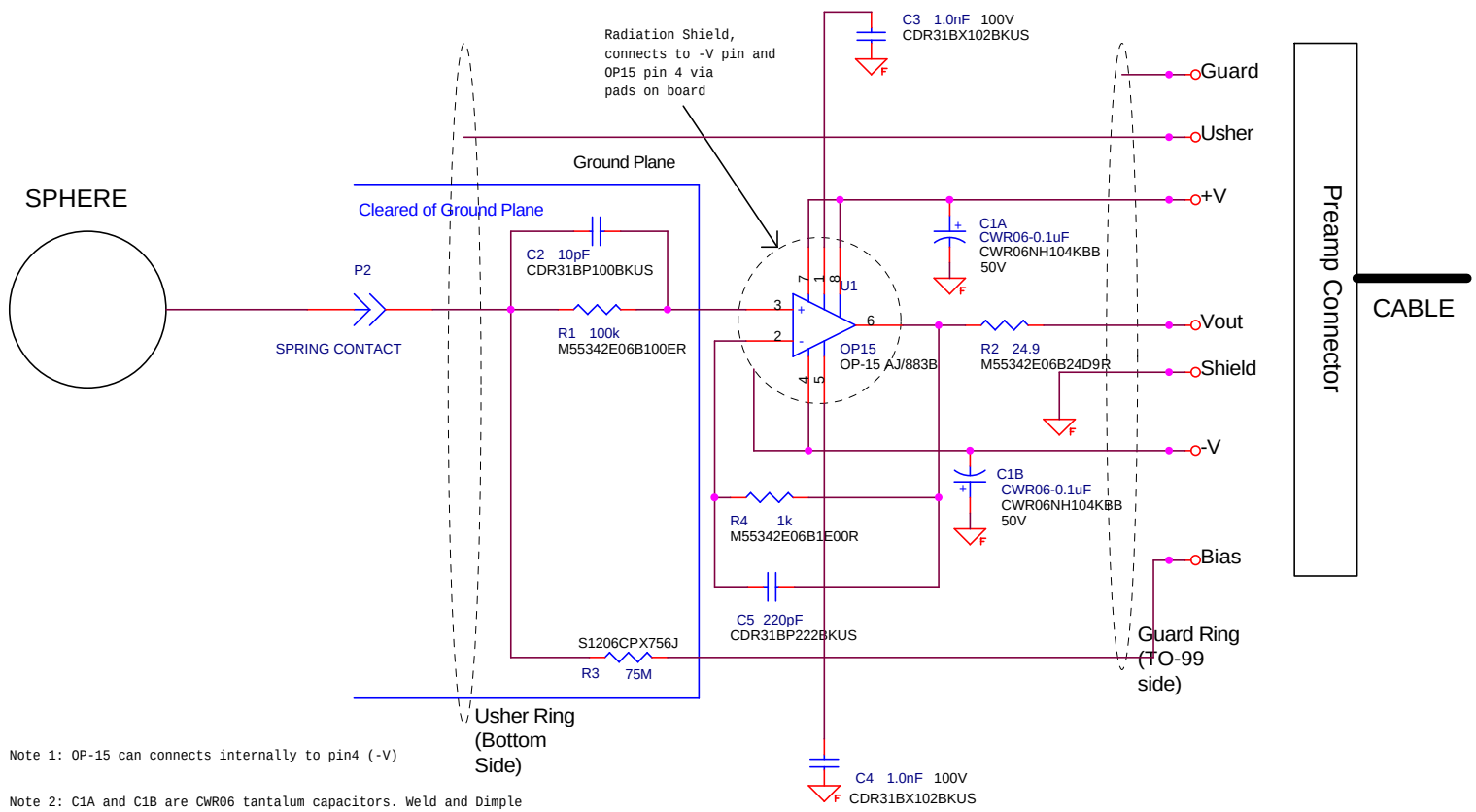

Note 1: OP-15 can connects internally to pin4 (-V)

Note 2: C1A and C1B are CWR06 tantalum capacitors. Weld and Dimple Projection Identifies Anode (+) Terminal. Please refer to the assembly instructions before installation. The PSW material is Arlon 85NT. Please follow the recommendations for storage, drying and assembly of Printed Wiring Boards Containing Arlon 85NT Substrates.

Note 3: Board is labeled RBSP_EFW_PRE_001 Rev B

Thursday, March 25, 2010		
Title	RBSP EFW SPB PREAMP	
Size	Document Number RBSP_EFW_PRE_001C_SPB_SCH	Rev C
Date: Thursday, March 25, 2010	Sheet 1 of 1	